KARNATAKA LAW SOCIETY's

GOGTE INSTITUTE OF TECHNOLOGY UDYAMBAG, BELGAVI-590008

(An Autonomous Institution under Visvesvaraya Technological University Belagavi)

(APPROVED BY AICTE, NEW DELHI)

SCI-MANIA 2025

DESIGN REPORT

TEAM NAME : TEJAS

Team members	USN No
Sahana I M	2GI23EE038
Sudeep A B	2GI23ME106
Sindhu Patil	2GI23AE057

INDEX

Abstract

1. Introduction

  1.1 Objective

  1.2 Problem statement

2. List of components

  2.1 Off-shelf components

    2.1.1 Wheels

    2.1.2 Battery

    2.1.3 Motor

  2.2 In-house Fabricated Components

    2.2.1 Chassis / Body

    2.2.2 Wedge Structure

  2.3 Supporting Structures

    2.3.1 Clamps

    2.3.2 Wheel Couplings

    2.3.3 DPDT switch box

3. Methodology

  3.1 Requirement Analysis

  3.2 Drive System Selection

  3.3 Wheel Selection and Traction Analysis

  3.4 Motor Selection and Torque Calculations

  3.5 Speed and Power Analysis

  3.6 Battery Selection and Power Supply Design

  3.7 Component Fabrication and Integration

3.8 Safety and Mounting

4. Detailed design

4.1 Technical Specifications

4.2 Materials, Dimensions, and Features

4.3 Preliminary designs

5. Final design

5.1 Structural analysis

5.1.1 Assembly

5.1.2 Property

5.1.3 Mesh Analysis

5.1.4 Load Analysis

5.1.5 Optimization

6. Load Calculation

6.1 Force

6.2 Axle torque

6.2.1 Torque per motor

6.3 Power

6.4 Motor Speed and RPM

6.5 Battery

7. Bill of Materials

8. Result

9. Conclusion

Abstract

This report presents the design, development, and implementation of a compact, wedge-based sumo robot engineered to compete in the Robot Sumo Challenge held at KLS GIT. The primary objective of the project is to construct a robot capable of pushing opponents out of an 8 ft × 8 ft elevated metal arena or into designated trap zones, in compliance with strict dimensional, weight, and safety constraints. The robot is designed to fit within a cuboidal sizing box of 30 cm × 30 cm × 20 cm and weigh under 5.0 kg, including a securely mounted onboard battery system. A mechanical wedge serves as the main functional component for attack and defense, with no use of destructive weapons. The robot employs either wired or wireless control systems, with strategic advantages provided by wireless configurations. The design process emphasizes original, in-house fabrication of critical structural components, supported by CAD modeling, structural analysis using Abaqus, and rigorous testing. This report also includes the design methodology, fabrication procedures, control systems, testing phases, and detailed documentation required for competition evaluation, showcasing the integration of interdisciplinary engineering knowledge and teamwork.

1. Introduction

The Robot Sumo Challenge is a dynamic interdepartmental engineering competition aimed at promoting innovative thinking, mechanical design, and strategic control systems among students. Participating teams are required to design, fabricate, and program autonomous or remotely controlled sumo robots that compete in a head-to-head match. The primary goal is to push the opponent's robot either out of the designated arena or into one of the trap zones within a fixed match duration. The competition encourages a hands-on approach to engineering design, interdisciplinary teamwork, and practical implementation of theoretical knowledge in fields such as mechanical engineering, electronics, control systems, and computer science.

1.1 Objective

The main objective of the Robot Sumo Challenge is to design and construct a compact, mechanically robust, and control-efficient robot capable of:

- Competing within a defined 8 ft × 8 ft elevated arena.
- Pushing or maneuvering the opponent's robot into traps or out of the arena.
- Adhering to strict dimensional, weight, and power constraints.
- Demonstrating in-house manufacturing, structural design, and documentation skills.
- Utilizing allowed off-the-shelf components while designing the structural and mechanical elements from scratch.

The competition also aims to test student's ability to manage real-time problem-solving through pit stops, apply strategic decision-making, and follow standardized engineering design documentation practices.

1.2 Problem Statement

The task is to design and build a small sumo robot that can fit completely inside a box measuring 30 cm long, 30 cm wide, and 20 cm high, and must weigh less than 5 kg, including its battery. The robot must use a mechanical wedge as its main tool to push or lift opponents, without using any harmful weapons like spinners, fire, or liquids. It should be powered by safe batteries (LiPo, Li-Ion, or Lead Acid) that are securely placed inside the robot. Teams must design and make important parts like the chassis, body, and wedge themselves—only standard parts like motors, wheels, and electronics can be bought. The robot can be controlled either by wire or wirelessly. Matches will take place in an 8 ft × 8 ft metal arena with two trap zones, and teams score points by pushing the opponent's robot out of the arena or into traps. A detailed design report with photos and analysis is also required to be submitted.

2. List of Components

The following are the list of Components that are used in the bot built;

2.1 Off the shelf Components

To comply with competition guidelines, certain essential components were sourced off the shelf. These parts are standardized, readily available, and allowed by the rulebook. Their use ensures reliability, cost-efficiency, and time-effective development. The following components were used.

2.1.1 Wheels

The robot is equipped with smooth rubber wheels of 85 mm diameter, selected for their balance between maneuverability and ground contact surface. To enhance grip and prevent slippage during high-torque pushing interactions, the wheels are additionally covered with bat grip material, which offers a soft, high-friction surface without causing any damage to the arena or opponent robots.

Parameter	**Specification**
Type	Smooth rubber wheels
Diameter	85 mm
Grip Enhancement	Bat grip tape (non-damaging, high-friction wrap)
Wheel Count	4
Drive Configuration	4WD

Table 2.1.1 Specification of Wheels

Justification: The 85 mm diameter provides a good balance between speed and torque. Smooth rubber offers basic grip without damaging the arena surface. The addition of bat grip wrapping enhances traction, especially useful in pushing duels and edge control. This setup improves control precision during direction changes and maintains robot stability under heavy load.

2.1.2 Batteries

The robot is powered by a custom-built 3S3P Lithium-Ion battery pack, assembled using nine 2000 mAh cells, each rated at 3.7 V nominal and 4.2 V maximum. This configuration provides a total capacity of 6000 mAh and a nominal voltage of 11.1 V, with a peak of 12.6 V. The pack is equipped with a Battery Management System (BMS) to ensure safe operation by protecting against overcharge, over-discharge, short circuits, and overheating. The battery is securely housed within the chassis and provides reliable, long-lasting power for the motors and control system throughout the match duration.

Parameter	**Specification**
Battery Type	Lithium-Ion (Li-Ion)
Cell Specifications (per unit)	3.7 V (nominal), 4.2 V (max), 2000 mAh, 7.4 Wh
Pack Configuration	3S3P (3 cells in series × 3 in parallel = 9 cells total)
Nominal Voltage	11.1 V (3 × 3.7 V)
Total Capacity	6000 mAh (3 × 2000 mAh in parallel)
Total Energy	66.6 Wh (9 cells × 7.4 Wh)
Battery Management System (BMS)	3S BMS with overcharge, over-discharge, short-circuit, and thermal protection
Weight	34g*9 – 315g

Table 2.1.2 Specification of Battery

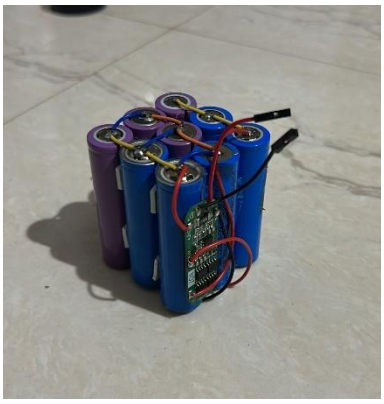

Justification: The 3S3P Lithium-Ion battery pack provides a stable and sufficient nominal voltage of 11.1V with a generous capacity of 6000 mAh, offering a balance between power output and runtime. The parallel configuration increases current capacity while the series setup provides the necessary voltage for driving motors and electronics. The inclusion of a Battery Management System (BMS) ensures protection from overcharging, deep discharge, overheating, and short circuits, maintaining safety throughout operation. The battery pack is securely housed inside the robot, contributing to centralized weight distribution and overall system reliability.

2.1.3 Motors

The robot is driven by Jhoson 300 RPM DC gear motors, which provide a reliable balance of torque and speed essential for effective movement and pushing strength during matches. These brushed DC motors operate at 12V and are known for their durability, affordability, and compatibility with standard motor controllers and couplings. The motors are securely mounted to the chassis and directly coupled to the drive wheels to ensure efficient power transmission and responsive control.

Parameters	**Specifications**
Type	Brushed DC Gear Motor
Brand	Jhoson
Operating Voltage	12V DC
Rated Torque per motor	4.5 kg-cm
Current Drawn per motor	1.2 A
Stall current per motor	4 A
Quantity	4
No-load Speed	300 rpm
Gearbox diameter	37mm
Output Shaft	6 mm with M3 thread hole
Weight	180g – 300g
Motor diameter	28.5 mm
Power output	~5–10 W per motor

Table 2.1.3 Specifications of Motor

Justification: The Jhoson 300 RPM DC gear motors were selected for their optimal balance of speed and torque, making them ideal for sumo-style competitions where pushing power and maneuverability are critical. The 300 RPM output allows for moderate speed suitable for aggressive engagement while retaining sufficient torque to drive the robot and overcome resistance during pushing battles.These motors are known for being cost-effective, durable, and easy to interface with standard motor drivers. When powered at 12V, they deliver reliable performance while staying within the voltage limits set by the competition.

2.2 In-house Fabricated Components

As per the competition requirements, all core structural and mechanical components of the robot were originally designed and fabricated by the team. These parts form the functional and aesthetic foundation of the robot and were built using in-house resources and manufacturing tools such as machining, drilling, cutting, and 3D printing.

2.2.1 Chassis/Body

The chassis of the robot was fully designed and fabricated in-house using 1.5 mm thick mild steel sheets. The material was selected for its high strength-to-weight ratio, ensuring structural integrity while keeping the robot within the allowable weight limit. The chassis measures 12.5 cm × 5 cm and forms the core structural frame that supports all key components such as the motors, battery pack, and wedge mechanism.

To achieve the desired rigidity and durability, welding techniques were used to join the structural elements, providing a robust, vibration-resistant frame capable of withstanding impacts during matches. Cutouts and mounting holes were precisely made to ensure efficient layout, proper weight distribution, and easy maintenance access. This chassis reflects the team’s focus on functional design and meets the competition's requirements for original, in-house fabrication.

2.2.2 Wedge Structure

The robot's primary attacking and defensive mechanism, the wedge, is fabricated from the same 1.5 mm thick mild steel used for the chassis, ensuring strength and durability. The wedge design is specifically engineered to push or lift opponents during the competition. It extends from the front of the robot and is angled to facilitate effective defense by deflecting opponents and preventing them from pushing the robot off the arena. The wedge structure is welded securely to the chassis to maintain structural integrity during high-stress engagements in the arena.

The choice of mild steel provides the necessary rigidity and resistance to deformation, while its relatively low weight allows for greater mobility and ease of control. The wedge's geometry and positioning are optimized to maximize effectiveness in both offensive and defensive strategies, contributing significantly to the robot's overall performance.

2.3 Supporting components

2.3.1 Clamps

Clampers are used to firmly secure various mechanical assemblies such as the chassis frame, motor mounts, and wedge components. They ensure that structural integrity is maintained during high-impact interactions in the arena.

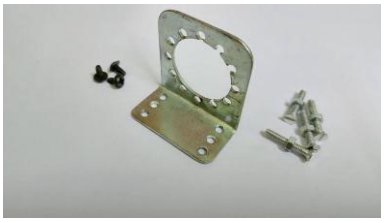

Justification: In a high-force sumo robot competition, mechanical vibrations and impacts are frequent. Clampers provide reliable, non-permanent fastening, making the robot both structurally stable and easy to disassemble for maintenance or pit stop adjustments during the match. Their use is essential for safety, flexibility, and quick servicing.

2.3.2 Wheel Couplings

Couplings are used to connect the motor shafts to the wheels or drive axles, allowing efficient power transfer while accommodating minor misalignments.

Justification: Given the compact dimensions of the robot and the need for precise wheel alignment, shaft couplings help minimize torque loss and mechanical wear. They ensure smooth rotational motion and protect the motor from direct stress, which increases the durability and efficiency of the drive system.

2.3.3 DPDT Switch box

A DPDT switch box is used as a master power control mechanism, allowing safe and quick disconnection or reversal of power flow to the motors or system circuits if needed.

Justification: This switch adds a layer of safety and control, especially important during testing, emergencies, and competition starts/stops. It meets the competition requirement of having an easily accessible master switch and ensures the robot can be completely deactivated quickly, reducing the risk of accidental motion or electrical hazards.

These components are crucial for the functionality, maintainability, and safety of the robot, and all fall within the permitted standard hardware category defined in the rulebook.

3.Methodology

The design and development process of our robot was approached methodically to ensure compliance with the Robot Sumo Challenge specifications while optimizing performance, efficiency, and reliability. The methodology followed a structured flow from requirement analysis and component selection to performance calculations and in-house fabrication.

3.1 Requirement Analysis

We began by analyzing and reading through the competition rulebook and constraints, particularly focusing on the sizing box (30×30×20 cm), maximum weight (5 kg), and power limits (12V max). These constraints guided every design decision and ensured rule compliance.

3.2 Drive System Selection

A **4WD (Four-Wheel Drive)** configuration was selected to ensure maximum traction, stability, and redundancy. This choice allows for full utilization of the robot’s weight for traction, which is critical in pushing matches.

3.3 Wheel Selection and Traction Analysis

Smooth rubber-covered wheels with **a diameter of 85 mm** were selected, enhanced with bat grip layers to improve surface traction. The **wheel radius (42.5 mm)** was used to calculate the required torque for effective traction. Using the standard friction coefficient ($\mu \approx 0.8$) and maximum weight (5 kg), the **required traction force** was calculated to be approximately **39.24 N**.

3.4 Motor Selection and Torque Calculations

Based on the required traction force and wheel radius, the total axle torque was calculated to be 1.67 N-m (17.0 kg-cm). This torque, when distributed across four motors, required ~4.25 kg-cm per motor. Applying a 1.5x to 2x safety factor, motors with 6.4 to 8.5 kg-cm stall torque were chosen. The Jhoson DC geared motors (12V, 300 RPM) met these requirements with a balance of speed and torque, making them ideal for robot sumo combat.

3.5 Speed and Power Analysis

The expected linear speed of the robot was calculated to be 1.33 m/s at 300 RPM. Each motor's power output was estimated at ~52.5 W, giving a total system power requirement of ~210 W for all four motors under load.

3.6 Battery Selection and Power Supply Design

A custom-built 3S3P Lithium-Ion battery pack was chosen, offering a total voltage of 12.6V and higher capacity. Given the total power draw (~210 W) and the desired runtime (~15 minutes), a minimum battery capacity of 4170 mAh was calculated. The pack includes a Battery Management System (BMS) to ensure safety and efficient energy delivery.

3.7 Component Fabrication and Integration

Key structural components like the chassis and wedge were fabricated in-house using 1.5 mm thick mild steel, joined using welding for high durability. The wedge was designed as a continuation of the chassis to provide seamless integration and a strong defensive front. Off-the-shelf components such as motors, wheels, and batteries were used where allowed, while all structural elements were custom-built to meet the originality requirements.

3.8 Safety and Mounting

All components, including the battery, were securely mounted to ensure durability during operation. The use of clampers, couplings, DPDT switch box, and protective housings ensured proper electrical control and structural safety.

4.Detailed Design

4.1 Technical Specifications

Parameter	Specification
Drive Configuration	4WD (Four-Wheel Drive)
Motor Type	Brushed DC Geared Motors (Jhoson 12V, 300 RPM)
Wheel Type	Rubber-covered with enhanced traction grip
Wheel Diameter	85 mm with bat grip surface
Battery Configuration	3S3P Lithium-Ion Pack with BMS
Battery Voltage	12.6V (max), 11.1V (nominal)
Battery Capacity	~6000 mAh total
Chassis Material	1.5 mm thick Mild Steel
Chassis Dimensions	12.5 cm × 5 cm main frame
Wedge Material	Same as chassis (mild steel), welded
Wedge Design	Extended front wedge for pushing and defense
Total Weight	~ 2.25 Kg < 5Kg
Control System	Wired, via flexible umbilical cord
Max Speed	~1.33 m/s
Torque per Motor	~6.4 – 8.5 kg-cm (with safety factor)
Master Switch	DPDT switch box integrated

Table no 4.1 Technical specifications

4.2 Materials, Dimensions, and Features

Chassis: Fabricated using 1.5 mm mild steel sheet, welded for high strength and durability. The dimensions of the base are 12.5 cm × 5 cm. The design supports balanced weight distribution for traction.

Wedge: The front wedge is made of the same material and seamlessly welded to the chassis. It is sloped upward for efficient lifting and pushing of the opponent, while adhering to the rules (no negative wedge).

Wheels: 85 mm rubber wheels covered with bat grip to increase friction with the arena surface. The wheels were chosen to balance grip, speed, and torque transmission.

Motors: 12V DC Jhoson Geared Motors rated at 300 RPM. Selected for their compact size, adequate torque output, and reliability.

Battery: A 3S3P Lithium-Ion configuration with 12V nominal output, connected using a BMS for protection. It offers high energy density and sufficient current handling.

Switch & Wiring: A DPDT switch box was integrated as the main power controller. Clampers and couplings were used for safe, stable mechanical and electrical connectivity.

4.3 Preliminary designs

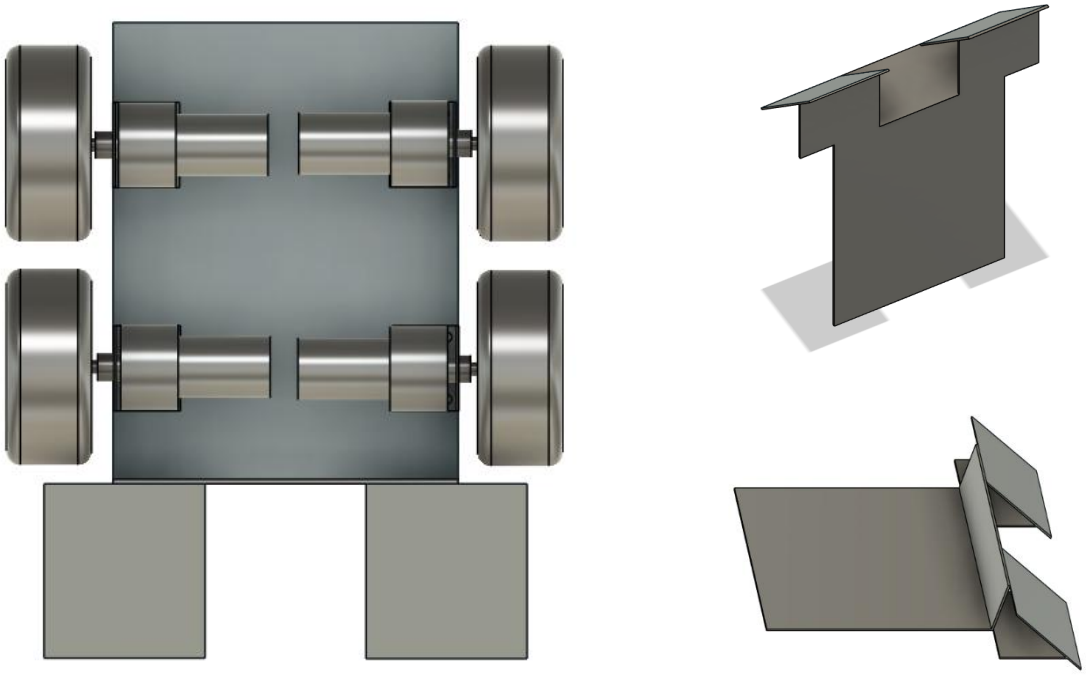

5. Final design

5.1 Structural Analysis

5.1.1 Assembly

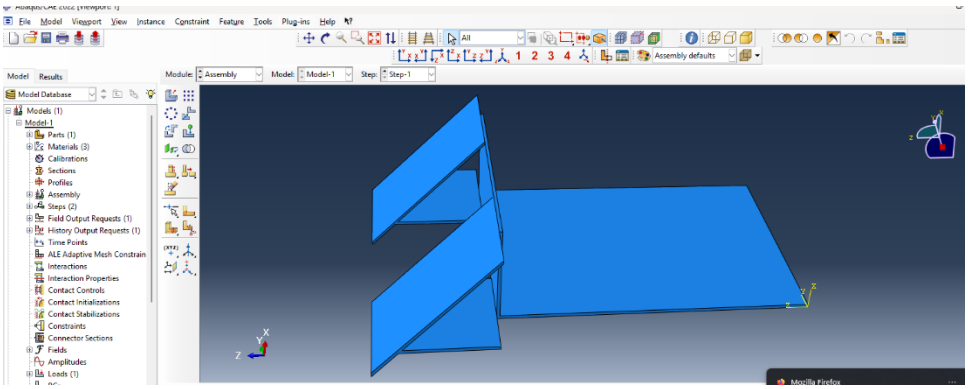

5.1.2 Property

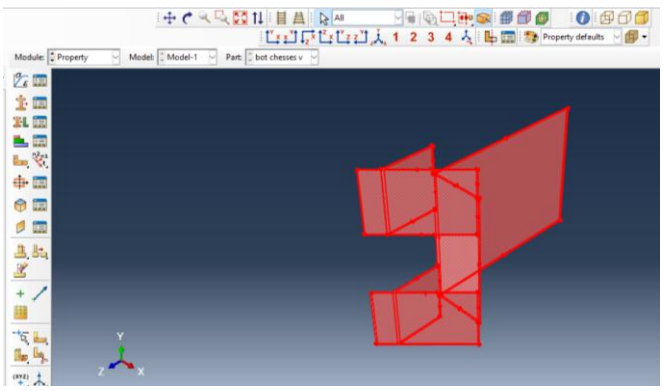

5.1.3 Mesh Analysis

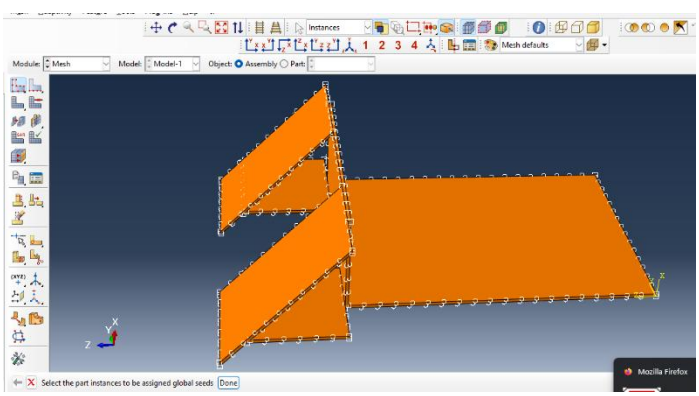

5.1.4 Load Analysis

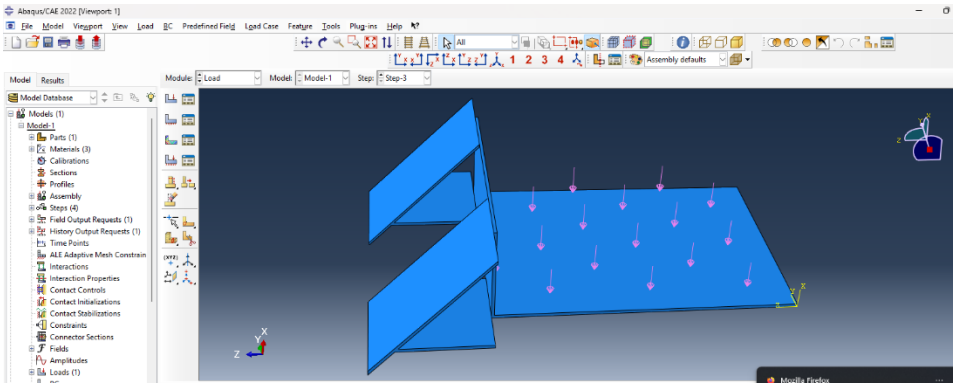

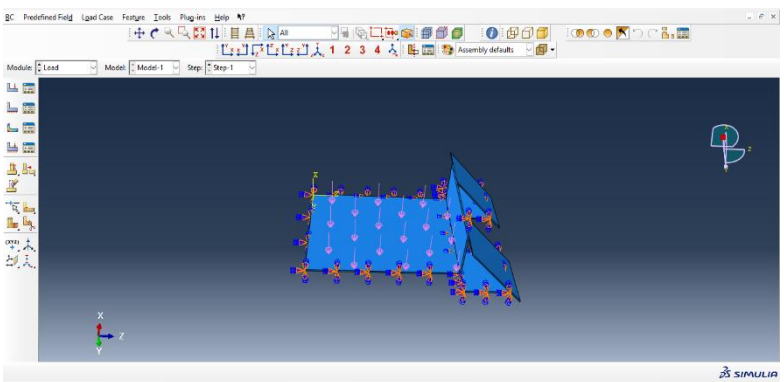

5.1.5 Optimization

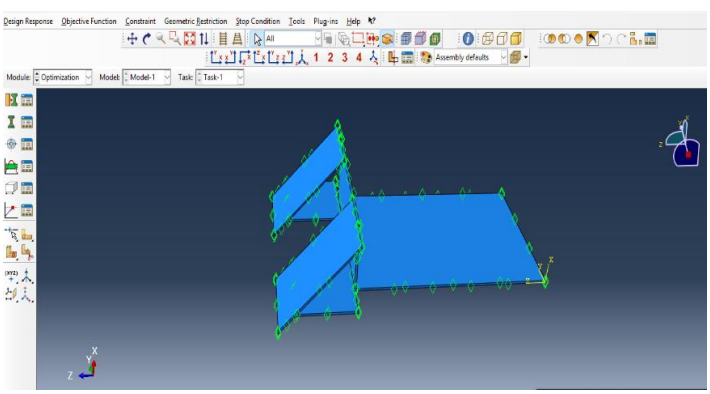

6. Load Calculations

6.1 Force

The traction force is the amount of force required to push the robot. This force is the target force that your motors should be able to generate.

F_ traction = μ × Normal Force

The Normal Force is simply the weight of the robot:

Normal Force = Mass × g = 5 kg × 9.81 m/s*2 = 49.05 N

F_ traction = 0.8 × 49.05 N ≈ 39.24N

So**, the target traction force is approximately 39.24 N.**

6.2 Axle Torque

The required total axle torque to generate the traction force is given by :

Total Torque = F_ traction × Wheel Radius

The wheel radius is half of the wheel diameter:

Wheel Radius = 85 mm/2 = 42.5 mm = 0.0425 m

Now calculate the torque: Total Torque = 39.24 N × 0.0425 m ≈ 1.67N-m

Now, convert this torque into kg-cm: 1 N-m ≈ 10.2 kg-cm

Total Torque = 1.67 N-m × 10.2 ≈ 17.0 kg-cm.

6.2.1 Torque per Motor

Since our robot uses a 4WD system, the total torque is divided equally among the four motors.

Torque Per Motor = Total Torque / 4

Torque Per Motor = 17.0kg-cm / 4 ≈ 4.25kg-cm

This is the minimum stall torque each motor needs to generate.

For 1.5x safety factor: Motor Stall Torque = 4.25 kg-cm × 1.5 ≈ 6.375 kg-cm

For 2x safety factor: Motor Stall Torque = 4.25 kg-cm × 2 ≈ 8.5 kg-cm

6.3 Power

The power required for the motors to generate this torque and speed.

Power Required: Power = Torque × Angular Velocity

The angular velocity: Angular Velocity (rad/s) = (2π × Motor RPM) / 60

Angular Velocity = (2π × 300)/ 60 = 31.42 rad/s

Now, Power (W) = 1.67 N-m × 31.42 rad/s ≈ 52.5 W

Each motor will require approximately 52.5 W of power to operate at its full capacity.

For four motors: **Total Power (W) = 52.5 W × 4 = 210 W**

6.4 Motor Speed and RPM

The motors run at 300 RPM (at rated voltage of 12.6V). To calculate the robot's speed, we use the following formula for the linear velocity of the robot's wheels:

Wheel Speed (m/s) = Motor RPM × ((π ×Wheel Diameter) / 60)

Given the wheel diameter is 85mm or 0.085m,

Wheel Speed = 300 × ((π × 0.085)/60) ≈ 1.33 m/s

So, **the robot will travel at 1.33 m/s**.

6.5 Battery

Battery Discharge Rate (C-Rating):

For 4 motors each requiring 52.5W, the total power draw is 210W.

To find the current: Current (A) = Voltage (V) / Power (W)

Current = 210 / 12.6 ≈ 16.67 A

Now, the required capacity of the battery to run the robot for 10-15 minutes (0.25 hours for safety margin): **Capacity = 16.67 A × 0.25 = 4.17 Ah = 4170 mAh**

So, for a safe runtime of about 15 minutes, a 4170mAh battery would be required. You could go for 4000-5000mAh (to account for voltage sag and ensure longer runtime).

Based on the robot's total weight of 5 kg and 85 mm diameter wheels, the estimated required traction force is approximately 39.24 N. This corresponds to a total axle torque of around 1.67 N-m (or 17.0 kg-cm). With a 4-wheel drive system, the torque required per motor is about 4.25 kg-cm, and with a safety factor of 1.5–2x, the stall torque per motor should ideally be between 6.4 kg-cm and 8.5 kg-cm. The calculated wheel speed is approximately 1.33 m/s, and the power output per motor is estimated at 52.5 W, bringing the total power requirement for all four motors to roughly 210 W. To support this power demand and provide a runtime of at least 15 minutes, the battery pack should have a minimum capacity of 4170 mAh. These calculations ensure that the robot performs efficiently without overloading the motors or power system.

7. Bill of Material (BoM)

Sl. No.	Component	Specification / Description	Quantity	Unit Price (INR)	Total Cost (INR)
1	DC Geared Motors	Jhoson, 12V, 300 RPM, 6mm shaft	4	450	1800
2	Wheels	85 mm rubber wheels with bat grip	4	300	1200
3	Mild Steel Sheet	1.5 mm thick, chassis & wedge construction	1 (sheet) 2*1ft	80	80
4	Lithium-Ion Cells	3.7V, 2000 mAh, 3S3P configuration	9	50	450
5	BMS (Battery Management System)	3S 12V BMS	1	150	150
6	DPDT switch Box	To protect switches	1	40	40
7	Switches	For control	2	36	72
8	Nuts and bolts	To hold motors	20	5	100
9	Couplers	Shaft couplers	4	80	320
10	Clampers	wire clampers	4	20	80
11	Ribbon wires	To connect	2m	30	60
12	Charger	To power batteries	1	200	200
	TOTAL COST				4,552

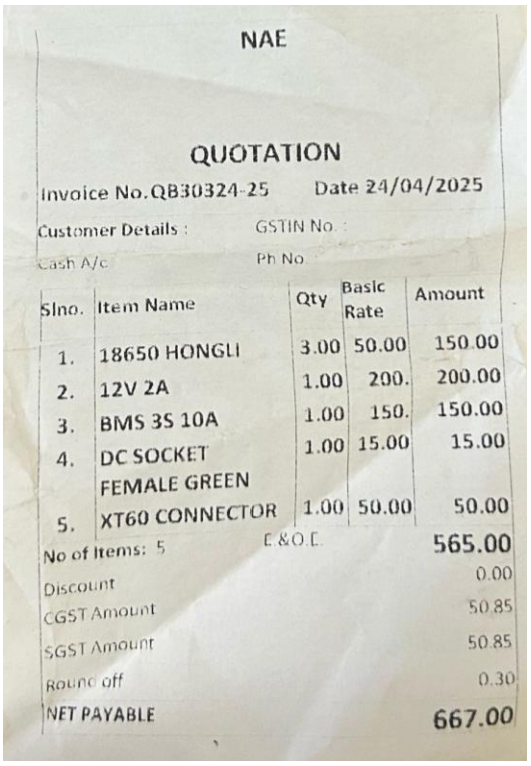

NAE

QUOTATION

Invoice No.QB30324-25 Date 24/04/2025

Customer Details : GSTIN No. :

Cash A/c Ph No.

Slno.	Item Name	Qty	Basic Rate	Amount
1.	18650 HONGLI	3.00	50.00	150.00
2.	12V 2A	1.00	200.	200.00
3.	BMS 3S 10A	1.00	150.	150.00
4.	DC SOCKET FEMALE GREEN	1.00	15.00	15.00
5.	XT60 CONNECTOR	1.00	50.00	50.00

No of Items: 5 E &O.E 565.00

Discount 0.00

CGST Amount 50.85

SGST Amount 50.85

Round off 0.30

NET PAYABLE 667.00

NAE

QUOTATION

Invoice No.QB27824-25 Date 23/04/2025

Customer Details : GSTIN No. :

Cash A/c Ph No. :

Slno.	Item Name	Qty	Basic Rate	Amount
1.	80MM WHEEL BUGGI	4.00	375.	1500.00
2.	SCREW	20.	2.00	40.00

No of Items: 2 E &O.E 1540.00

Discount 0.00

CGST Amount 138.60

SGST Amount 138.60

Round off 0.20

NET PAYABLE 1817.00

8. Results

The final design was tested in simulated match environments to validate its performance under expected competition conditions. The following key results were observed:

Dimensional Compliance: The robot successfully fits within the specified 30 cm × 30 cm × 20 cm box, with room for wiring and control elements. The total assembled weight was measured at approximately 2.25 kg, well within the 5 kg limit.

Mobility & Speed: The robot achieved a linear speed of approximately 1.33 m/s, aligning with calculated expectations. The 4WD configuration enabled smooth and responsive movement with excellent maneuverability.

Traction & Pushing Force: Enhanced wheel grip using bat grip tape significantly improved traction. The robot generated an effective pushing force of ~39.24 N, which was sufficient to move test weights and simulated opponent bots of equal or slightly higher mass.

Torque & Power Delivery: Each Jhoson motor delivered adequate torque (~6.4–8.5 kg-cm with safety factor), enabling the robot to handle aggressive encounters without stalling or overheating. Power delivery remained stable throughout operation.

Battery Performance: The custom-built 3S3P Lithium-Ion battery pack provided over 15 minutes of continuous runtime under combat load. The BMS functioned reliably, ensuring safe operation without voltage sag or thermal buildup.

Structural Integrity: The mild steel chassis and wedge showed no signs of deformation after repeated impact tests. Welded joints and mountings maintained rigidity, confirming the structural resilience of the design.

Control System: The wired control system demonstrated low-latency, responsive inputs. The DPDT switch enabled quick and safe shutdown during testing and operation.

9. Conclusion

The design and development of the compact wedge-based sumo robot successfully met the technical and functional objectives outlined by the Robot Sumo Challenge. Through careful component selection, in-house fabrication, structural optimization, and iterative testing, the final prototype demonstrated:

Compliance with all size, weight, and safety constraints.

Reliable and effective pushing performance, aided by high-traction wheels and optimal torque.

Robust mechanical design and structural durability under competitive conditions.

Safe, stable, and efficient power management through a custom battery system with BMS protection.

Seamless integration of mechanical, electrical, and control subsystems, showcasing interdisciplinary engineering application.

The project highlights the importance of methodical design, teamwork, and hands-on problem solving. Future improvements could include the addition of wireless control for increased tactical flexibility, integration of sensors for partial autonomy, and further weight optimization to enhance acceleration and maneuverability. Overall, the robot is well-prepared for competition and reflects the team’s capability to apply theoretical knowledge to real-world engineering challenges.